UNIVERSITY OF CAMBRIDGE INTERNATIONAL EXAMINATIONS
International General Certificate of Secondary Education

| | |
|---|---|
| CANDIDATE NAME | |

| | | | | | | | | | | | |
|---|---|---|---|---|---|---|---|---|---|---|---|
| CENTRE NUMBER | | | | | | CANDIDATE NUMBER | | | | | |

**PHYSICS** **0625/22**

Paper 2 Core **May/June 2012**

**1 hour 15 minutes**

Candidates answer on the Question Paper.

No Additional Materials are required.

**READ THESE INSTRUCTIONS FIRST**

Write your Centre number, candidate number and name on all the work you hand in.
Write in dark blue or black pen.
You may use a pencil for any diagrams or graphs.
Do not use staples, paper clips, highlighters, glue or correction fluid.
DO **NOT** WRITE IN ANY BARCODES.

Answer **all** questions.
You may lose marks if you do not show your working or if you do not use appropriate units.
Take the weight of 1 kg to be 10 N (i.e. acceleration of free fall = 10 m / $s^2$).

At the end of the examination, fasten all your work securely together.
The number of marks is given in brackets [ ] at the end of each question or part question.

| For Examiner's Use | |
|---|---|
| 1 | |
| 2 | |
| 3 | |
| 4 | |
| 5 | |
| 6 | |
| 7 | |
| 8 | |
| 9 | |
| 10 | |
| 11 | |
| 12 | |
| Total | |

This document consists of **15** printed pages and **1** blank page.


© UCLES 2012


www.root19.com +91 - 9969 353 391

For Examiner's Use

**1** Fig. 1.1 shows how the speed of a truck varies during a period of 80 s.

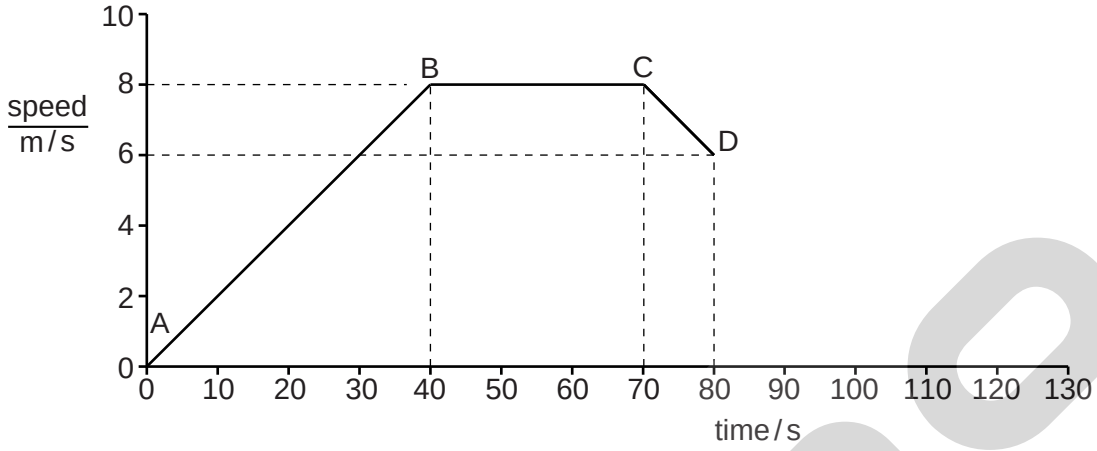


**Fig. 1.1**

**(a)** In which section of the journey is the truck

**(i)** travelling at constant speed, .....

**(ii)** increasing its speed? .....
[2]

**(b)** Calculate the distance travelled by the truck in

**(i)** the section BC,

distance = ..... m [4]

**(ii)** the section CD.

distance = ..... m [2]

**(c)** After point D, the truck takes 30 s to come to rest.

On Fig. 1.1, draw a line to show this part of the motion of the truck. [1]

[Total: 9]


www.root19.com +91 - 9969 353 391

For Examiner's Use

**2** Fig. 2.1 shows a simple mercury barometer alongside a mercury manometer that contains some trapped gas.

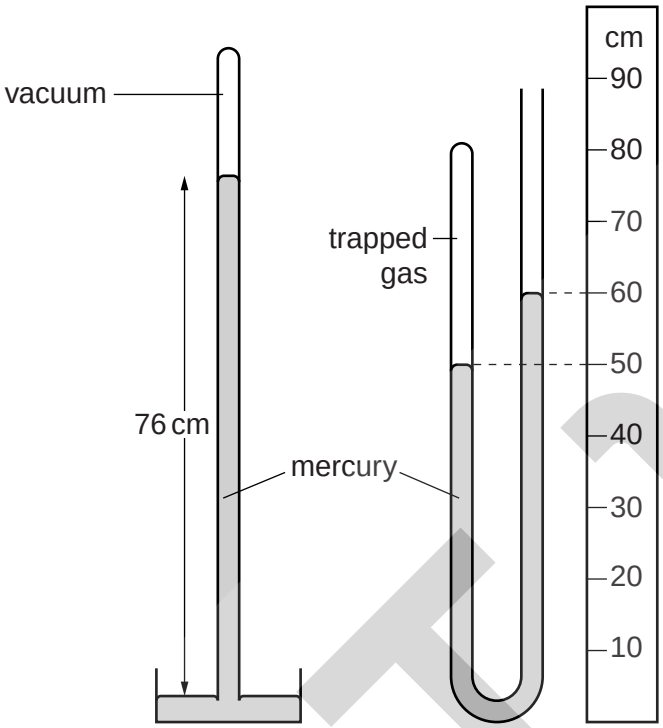


**Fig. 2.1**

From Fig. 2.1 find

**(a)** the pressure of the atmosphere,

pressure of atmosphere = ..... cm of mercury [1]

**(b)** the pressure of the trapped gas.

pressure of trapped gas = ..... cm of mercury [3]

**(c)** The atmospheric pressure increases.

State what happens to the levels of mercury in the manometer.

left-hand level .....

right-hand level .....
[2]

[Total: 6]


www.root19.com +91 - 9969 353 301

For Examiner's Use

**3** Fig. 3.1 shows a rectangular block of wood on a flat, rough horizontal board.

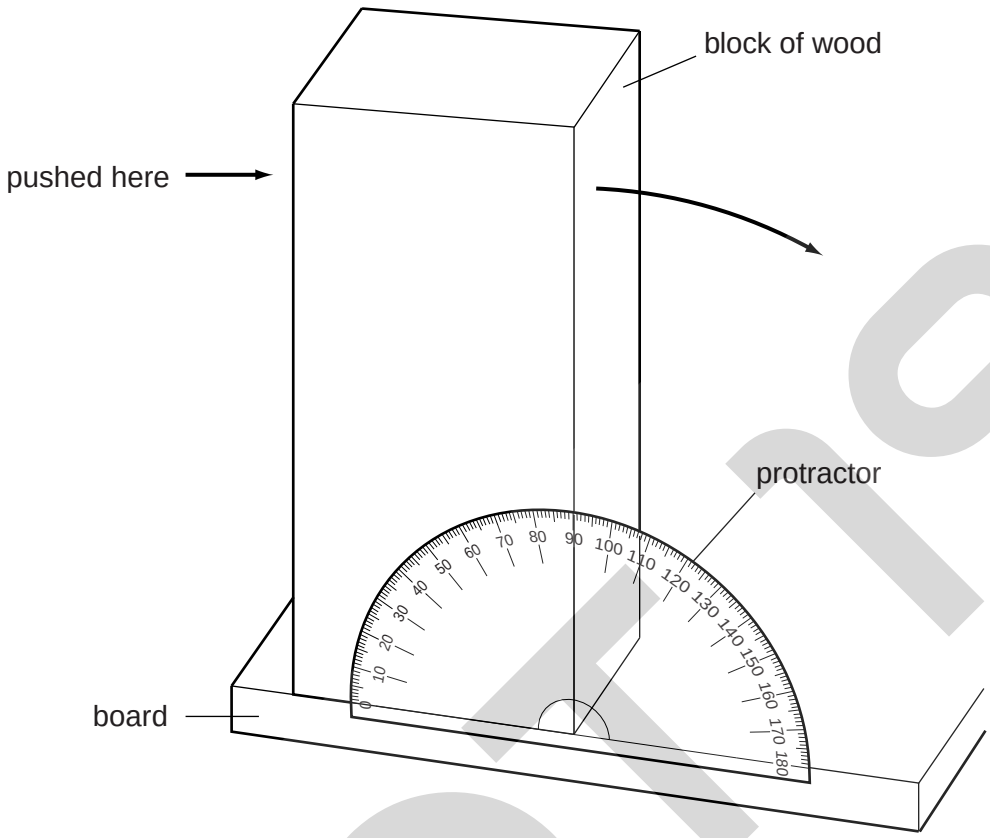


**Fig. 3.1**

The block is pushed at the top, as shown in Fig. 3.1, and it tilts to the right.

**(a)** On the front face of the block, draw the line that will be vertical at the instant before the block topples over. [1]

**(b)** Use the protractor shown on Fig. 3.1 to measure the angle through which the block tilts before it topples over.

angle = ..... [1]

**(c)** The block is put back on the board, as in Fig. 3.1. This time, instead of the block being pushed, the left-hand edge of the board is raised.

State the angle that the board makes with the horizontal at the instant the block topples over.

angle = ..... [1]

**(d)** State how your answer to **(c)** might differ if the procedure is repeated after several centimetres have been cut off the top of the block.

.....

..... [1]

[Total: 4]

© UCLES 2012
www.root19.com

+91 - 9969 353 391

For Examiner's Use

**4** Two geologists are collecting rocks from the bottom of a cliff. The rocks are loaded into a basket and then pulled up the cliff on the end of a rope, as shown in Fig. 4.1. The basket of rocks is brought to rest at the top of the cliff.

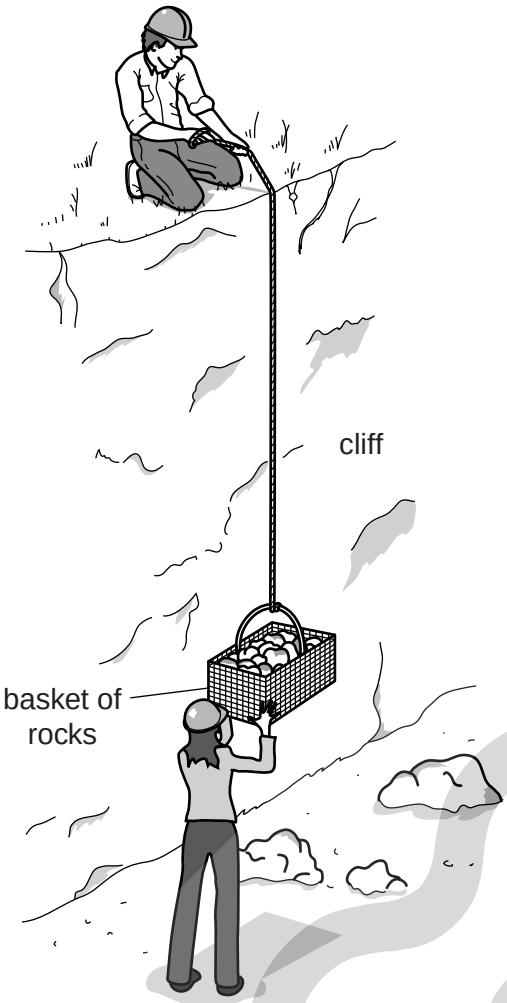


**Fig. 4.1**

**(a)** **(i)** Which form of energy that the basket possesses is significantly greater at the top of the cliff than when it is at the bottom of the cliff?

..... [1]

**(ii)** Which two measurements must be made in order to calculate the increase in energy in **(i)**?

1. .....

2. .....
[2]

**(b)** Which form of energy in his body has the man at the top of the cliff used in order to raise the basket of rocks?

..... [1]

**(c)** State the measurement needed, in addition to those in **(a)(ii)**, in order to calculate the useful power developed by the man at the top of the cliff.

..... [2]

[Total: 6]

© UCLES 2012
www.root19.com

+91 - 9969 353 301

For Examiner's Use

**5** The boy shown in Fig. 5.1 has just thrown a number of stones into a pond, one after the other. Fig. 5.1 shows the crests of the waves a short time after the stones landed in the water.

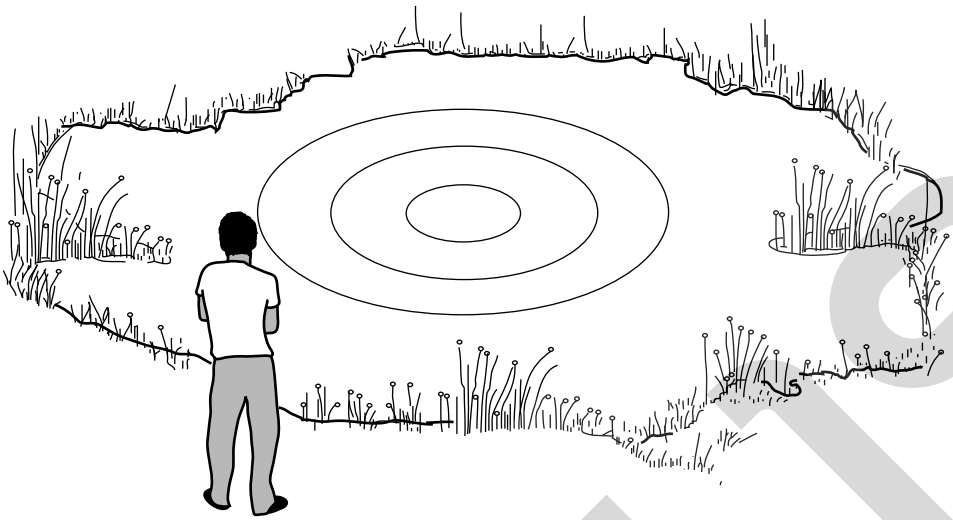

**Fig. 5.1**

**(a)** On Fig. 5.1, mark with a cross the point where the stones hit the water. [1]

**(b)** Fig. 5.2 shows a section through the surface of the water before the stones land.

**Fig. 5.2**

On Fig. 5.2, sketch what the section of the surface might look like at the instant shown in Fig. 5.1. [2]

© UCLES 2012
www.root19.com

+91 - 9969 353 391

For Examiner's Use

**(c)** Later, the boy throws a single stone into the water. Fig. 5.3 shows, from above, the position of the wavefront at 2 s, 4 s and 6 s after the stone landed.

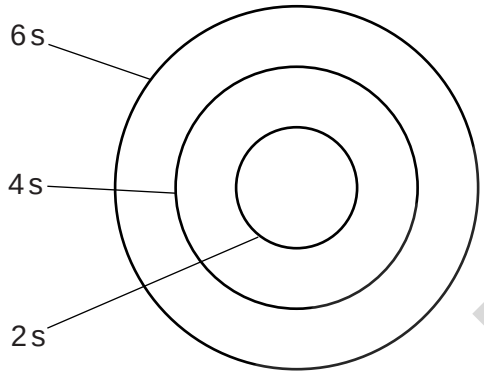


**Fig. 5.3**

**(i)** From Fig. 5.3, what can be deduced about the speed of the wave?

.....

.....

..... [2]

**(ii)** On Fig. 5.3, draw the wavefront 8 s after the stone landed. [2]

[Total: 7]

© UCLES 2012
www.root19.com

+91 - 9969 353 301

For Examiner's Use

**6** The liquid-in-glass thermometer in Fig. 6.1 has a scale from –10 °C to 110 °C.

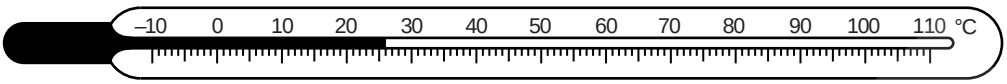


**Fig. 6.1**

**(a)** Two of the temperatures marked on the thermometer are known as *fixed points*.

State the values of these fixed points.

..... °C and ..... °C [1]

**(b)** The bulb of the thermometer shown in Fig. 6.1 is put into some boiling water.

**(i)** What happens to the liquid in the bulb when its temperature is raised?

.....

**(ii)** What is seen happening to the liquid in the capillary tube when the bulb is put in the boiling water?

.....

.....
[3]

**(c)** On a certain day in a cold country, the air temperature is –12 °C.

On Fig. 6.1, use an arrow to show approximately where the surface of the liquid will be at this temperature. [1]

[Total: 5]

© UCLES 2012
www.root19.com

+91 - 9969 353 391

For Examiner's Use

**7** A teacher is trying to find an unusual way to measure the speed of sound using an echo method.

She has a firework, which will make a loud bang at ground level when ignited. She also has a stopwatch and a tape measure.

**(a)** To obtain an echo, she needs a suitable reflector.

Suggest something that she could use as a reflector.

..... [1]

**(b)** She stands a measured distance of 360 m from her chosen reflector and ignites the firework in a safe manner.

**(i)** When should she start the stopwatch?

.....

**(ii)** When should she stop the stopwatch?

.....
[2]

**(c)** After she stops the stopwatch, its appearance is as shown in Fig. 7.1.

**Fig. 7.1**

**(i)** Using this reading and the distance from **(b)**, calculate the speed of sound in air.

speed of sound = ..... m/s [4]

**(ii)** Suggest one reason why the speed calculated in **(c)(i)** might not be quite correct. Assume that the stopwatch and tape measure function correctly.

.....

.....

..... [1]

[Total: 8]


www.root19.com +91 - 9969 353 301

For Examiner's Use

**8** **(a)** In terms of molecules, explain why solids expand when they are heated.

.....

.....

.....

.....

..... [2]

**(b)** **(i)** State one example where the expansion or contraction of a solid is a problem. Describe how this problem is solved. You may draw a diagram if it helps to clarify your answer.

.....

.....

.....

.....

.....

.....

..... [2]

**(ii)** Describe one example where the expansion or contraction of a solid is useful. You may draw a diagram if it helps to clarify your answer.

.....

.....

.....

.....

.....

.....

..... [2]

[Total: 6]

© UCLES 2012
www.root19.com

+91 - 9969 353 391

For Examiner's Use

**9** A solenoid with many turns is connected across a sensitive centre-zero millivoltmeter, as shown in Fig. 9.1.

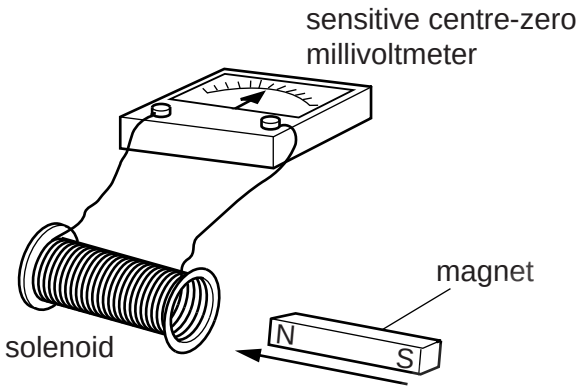


**Fig. 9.1**

**(a)** The N pole of a magnet is moved into the solenoid, and then held stationary in the solenoid.

Describe what happens to the needle of the millivoltmeter during this process.

.....

..... [2]

**(b)** The N pole is then removed from the solenoid.

Describe what happens to the needle during this process.

.....

..... [1]

**(c)** Complete the following sentence.

When the N pole moves into the solenoid, ..... is

..... in the solenoid. [2]

[Total: 5]

© UCLES 2012
www.root19.com

+91 - 9969 353 301

For Examiner's Use

**10** A length of bare uniform resistance wire is included in the circuit of Fig. 10.1. Contact C can be moved to any position along the resistance wire.

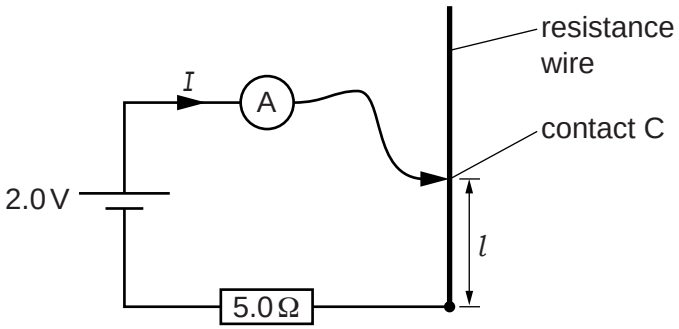


**Fig. 10.1**

**(a)** On the axes of Fig. 10.2, sketch the graph that relates the current *I* in the circuit to the length *l* of the resistance wire.

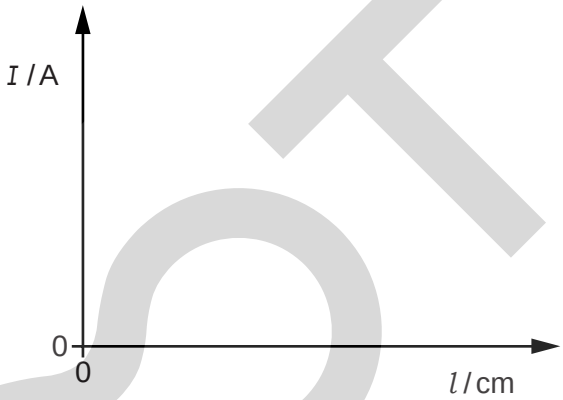


**Fig. 10.2** [2]

**(b)** Calculate the reading on the ammeter when the length *l* is zero.

ammeter reading = ..... A [3]

© UCLES 2012
www.root19.com

+91 - 9969 353 391

For Examiner's Use

**(c)** Contact C is moved so that the resistance of the length $l$ of the resistance wire is 15.0 Ω.

Calculate

**(i)** the total resistance of the circuit,

resistance = ..... Ω

**(ii)** the new ammeter reading.

ammeter reading = ..... A
[2]

**(d)** When $l$ = 25 cm, the reading on the ammeter is half that found in **(b)**.

Calculate the resistance of 25 cm of the resistance wire.

resistance = ..... Ω [2]

**(e)** Which of the following effects is caused by the current in the resistance wire?

Tick the boxes alongside **two** correct effects.

heating ☐

light ☐

sound ☐

magnetism ☐ [2]

[Total: 11]

© UCLES 2012
www.root19.com

+91 - 9969 353 301

For Examiner's Use

**11** **(a)** A particular radioactive source is known to emit either $\alpha$-particles or $\beta$-particles.

Describe an experiment involving a solid absorber to determine which type of particle is being emitted. Include a diagram of the experimental arrangement.

diagram

[1]

method

.....

.....

.....

..... [4]

statement of how the results identify the particles

.....

.....

..... [1]

**(b)** The table below gives the count-rate obtained from a radioactive source over a period of 80 minutes.

| time / minutes | 0 | 15 | 30 | 42 | 58 | 80 |
|---|---|---|---|---|---|---|
| count-rate / counts / s | 400 | 228 | 128 | 80 | 44 | 16 |

From this table, estimate the half-life of the radioactive source.

half-life = ..... minutes [1]

[Total: 7]

© UCLES 2012
www.root19.com

+91 - 9969 353 391

For Examiner's Use

**12** Fig. 12.1 represents a neutral atom.

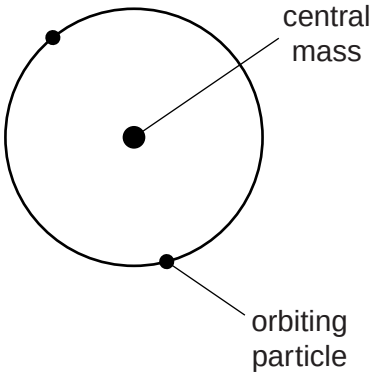


**Fig. 12.1**

**(a)** What name do we give to

**(i)** the central mass, .....

**(ii)** the two orbiting particles? .....
[2]

**(b)** The central mass contains two neutrons.

**(i)** What other type of particle does it contain? .....

**(ii)** How many of these other particles are there? .....
[2]

**(iii)** Use nuclide notation, $^{A}_{Z}X$, to describe the nuclide in Fig. 12.1, writing appropriate numbers in place of *A* and *Z*.

..... X
.....
[2]

[Total: 6]

© UCLES 2012
www.root19.com

+91 - 9969 353 391

**BLANK PAGE**

Permission to reproduce items where third-party owned material protected by copyright is included has been sought and cleared where possible. Every reasonable effort has been made by the publisher (UCLES) to trace copyright holders, but if any items requiring clearance have unwittingly been included, the publisher will be pleased to make amends at the earliest possible opportunity.

University of Cambridge International Examinations is part of the Cambridge Assessment Group. Cambridge Assessment is the brand name of University of Cambridge Local Examinations Syndicate (UCLES), which is itself a department of the University of Cambridge.